Work Order ID 68516

Thursday, April 14, 2011 11:47:31 AM

Item ID: D4380-13
Revision ID: PRELIM
Item Name: Panel, RH Oxygen and Oxy Minder

Accept

Setup Start
Stop

Start Date: 4/14/2011 **Start Qty:** 1.00
Required Date: 4/15/2011 **Req'd Qty:** 1.00
Reference:

Cust Item ID:
Customer: ~~PRELIMINARY ISSUE~~

Approvals: **Process Plan:** MMF **Date:** 11-04-14 **Tooling:** _____ **Date:** _____
QC: _____ **Date:** _____ **SPC (Y/N):** _____ **Date:** _____

Run Start
Stop

Sequence ID/ Work Center ID	Operation Description	Set Up/ Run Hours	Tool ID	Tool #	Plan Code	Accept Qty	Reject Qty	Reject Number	Insp. Stamp
Draw Nbr	**Revision Nbr**								
D4380	~~PA9~~ A								
100		0.00							
HandThermo	**Memo**	0.00				x1			DL 11/04/14
Hand Finishing Thermoforming	1-Cut Sheet to required Blank size								
									PTO →
105		0.00							
HandThermo	Dry Material **Memo**	0.00				x1			Dh 11/04/15
Hand Finishing Thermoforming	Dry Sheet as per QSI022 Kydex								

Temp: 150°F
Time IN: 4:30 pm 11/04/14
Time OUT: 7:00 am 11/04/15

Dart Aerospace Ltd

W/O: 68516	WORK ORDER CHANGES						
DATE	STEP	PROCEDURE CHANGE	By	Date	Qty	Approval Chief Eng / Prod Mgr	Approval QC Inspector
11/04/14	100	Use .125" Kydex instead of 0.080" to maintain thickness in deep draw area	DL	11/04/14		NP 11/05/13	

Part No: D4380-13 PAR #: _____ Fault Category: _____ NCR: Yes No DQA: _____ Date: _____

Resolution: _____ Disposition: _____ QA: N/C Closed: _____ Date: _____

NCR:	WORK ORDER NON-CONFORMANCE (NCR)							
DATE	STEP	Description of NC Section A	Corrective Action Section B			Verification Section C	Approval Chief Eng	Approval QC Inspector
			Initial Chief Eng	Action Description Chief Eng	Sign & Date			

NOTE: Date & initial all entries

H:\fFORMS\Quality Assurance\approved QA\NCRWO RevE

Work Order ID 68516

Thursday, April 14, 2011 11:47:31 AM

Item ID: D4380-13
Revision ID: PRELIM
Item Name: Panel, RH Oxygen and Oxy Minder

Accept

Setup **Start**
Stop

Start Date: 4/14/2011 **Start Qty:** 1.00
Required Date: 4/15/2011 **Req'd Qty:** 1.00
Reference:

Cust Item ID:
Customer:

Run **Start**
Stop

Approvals: **Process Plan:** _____ **Date:** _____ **Tooling:** _____ **Date:** _____
QC: _____ **Date:** _____ **SPC (Y/N):** _____ **Date:** _____

Sequence ID/ Work Center ID	Operation Description	Set Up/ Run Hours	Tool ID	Tool #	Plan Code	Accept Qty	Reject Qty	Reject Number	Insp. Stamp
110		0.00							
Thermoform	**Memo**	0.00							DL 11/04/15
Thermoforming Machine	1-Machine Set-Up 2-Pre-heat Tool to required temp. 3-Thermoform as per Dwg and Folio #FTA116 using tool DT9741 Dwg Rev: PA9 Folio Rev: A								
120	QC2- Inspect parts off machine FAI/FAIB	0.00							
QC	**Memo**	0.00							DL 11/04/15
Quality Control	Visuallly inspect part for proper formation and texture								PTO →
130	QC8- Inspect parts - second check	0.00							
QC	**Memo** Q41 per PA9 11/4/15	0.00							
Quality Control									

Dart Aerospace Ltd

W/O:		WORK ORDER CHANGES					
DATE	STEP	PROCEDURE CHANGE	By	Date	Qty	Approval Chief Eng / Prod Mgr	Approval QC Inspector

Prelim

Part No: D4380-13 PAR #: _____ Fault Category: _____ NCR: Yes No DQA: _____ Date: 11.4.15

Resolution: _____ Disposition: _____ QA: N/C Closed: _____ Date: _____

NCR: 68516		WORK ORDER NON-CONFORMANCE (NCR)						
DATE	STEP	Description of NC Section A	Corrective Action Section B			Verification Section C	Approval Chief Eng	Approval QC Inspector
			Initial Chief Eng	Action Description Chief Eng	Sign & Date			
11/04/15	120	One part pulled. too hot. Mould marks showing through	[illegible]	~~Scrap~~ & Replace. Pull part slightly cooler.	DL. 11/04/15	W	[illegible]	11/4/15

NOTE: Date & initial all entries

H:\fFORMS\Quality Assurance\approved QA\NCRWO RevE

Work Order ID 68516

Thursday, April 14, 2011 11:47:31 AM

Item ID: D4380-13
Revision ID: PRELIM
Item Name: Panel, RH Oxygen and Oxy Minder

Accept

Setup Start
Stop

Start Date: 4/14/2011 **Start Qty:** 1.00
Required Date: 4/15/2011 **Req'd Qty:** 1.00
Reference:

Cust Item ID:
Customer:

Run Start
Stop

Approvals: **Process Plan:** _____ **Date:** _____ **Tooling:** _____ **Date:** _____
QC: _____ **Date:** _____ **SPC (Y/N):** _____ **Date:** _____

Sequence ID/ Work Center ID	Operation Description	Set Up/ Run Hours	Tool ID	Tool #	Plan Code	Accept Qty	Reject Qty	Reject Number	Insp. Stamp
140		0.00							
HandThermo	**Memo**	0.00							DL. 11/04/15
Hand Finishing Thermoforming	1-Trim to finished dimensions as per Dwg								
150	QC2- Inspect parts off machine FAI/FAIB	0.00							
QC	**Memo**	0.00							DL. 11/04/15
Quality Control	Complete FAI document								
160	QC5- Inspect part completeness to step on W/O	0.00							
QC	**Memo** 1 per PAS 11/04/15	0.00							
Quality Control									

Dart Aerospace Ltd

W/O:		WORK ORDER CHANGES					
DATE	STEP	PROCEDURE CHANGE	By	Date	Qty	Approval Chief Eng / Prod Mgr	Approval QC Inspector

Part No: _____ **PAR #:** _____ **Fault Category:** _____ **NCR:** Yes No **DQA:** _____ **Date:** _____

Resolution: _____ **Disposition:** _____ **QA: N/C Closed:** _____ **Date:** _____

NCR:		WORK ORDER NON-CONFORMANCE (NCR)						
DATE	STEP	Description of NC Section A	Corrective Action Section B			Verification Section C	Approval Chief Eng	Approval QC Inspector
			Initial Chief Eng	Action Description Chief Eng	Sign & Date			

NOTE: Date & initial all entries

Work Order ID 68516

Thursday, April 14, 2011 11:47:31 AM

Item ID: D4380-13
Revision ID: PRELIM
Item Name: Panel, RH Oxygen and Oxy Minder

Accept

Setup Start
Stop

Start Date: 4/14/2011 **Start Qty:** 1.00
Required Date: 4/15/2011 **Req'd Qty:** 1.00
Reference:

Cust Item ID:
Customer:

Run Start
Stop

Approvals: **Process Plan:** _____ **Date:** _____ **Tooling:** _____ **Date:** _____
QC: _____ **Date:** _____ **SPC (Y/N):** _____ **Date:** _____

Sequence ID/ Work Center ID	Operation Description	Set Up/ Run Hours	Tool ID	Tool #	Plan Code	Accept Qty	Reject Qty	Reject Number	Insp. Stamp
170	Identify as per dwg & Stock Location: RAWK	0.00							
Packaging	Memo	0.00					4/4/15		
Packaging									
180	QC21- Final Inspection - Work Order Release	0.00						11/5/16	
QC	Memo	0.00							
Quality Control									

POSITIVE RECALL
EFFECTIVE 1/24/14 AUTH W
RELEASED JWD DATE 11/05/12

Dart Aerospace Ltd

W/O:		WORK ORDER CHANGES					
DATE	STEP	PROCEDURE CHANGE	By	Date	Qty	Approval Chief Eng / Prod Mgr	Approval QC Inspector

Part No: _____ **PAR #:** _____ **Fault Category:** _____ **NCR:** Yes No **DQA:** _____ **Date:** _____

Resolution: _____ **Disposition:** _____ **QA: N/C Closed:** _____ **Date:** _____

NCR:		WORK ORDER NON-CONFORMANCE (NCR)						
DATE	STEP	Description of NC Section A	Corrective Action Section B			Verification Section C	Approval Chief Eng	Approval QC Inspector
			Initial Chief Eng	Action Description Chief Eng	Sign & Date			

NOTE: Date & initial all entries

Picklist Print

Thursday, April 14, 2011 11:47:26 AM

Work Order ID: 68516

Parent Item: D4380-13

Parent Item Name: Panel, RH Oxygen and Oxy Minder

Start Date: 4/14/2011 **Required Date:** 4/15/2011

Start Qty: 1.00 **Required Qty:** 1.00

Comments: Rev. A New Issue, 11/04/04 DL verified by:EC

Component Item ID/ Item Name	Replacement Item ID	Mfg/ Purch	Bin Item	Primary Location	Last Location	Route Seq ID	Unit of Measure	Qty on Hand	Qty per Kit	Total Qty	Qty Issued	Date Issued	Status
MKYD100S.080-P1-52114		Purchased	No			100	sf	15.3625	6.9375	6.9375			
Kydex 100 .080													

Location	Loc Qty	Loc Code
therm	15.3625	
116510	15.3625	

DL.
11/04/15

.125" thick
ATTACHED EMAIL

MKYD61853.125-P3-62015 M110426 13.875 sq ft.

Dart Aerospace Ltd

W/O:		WORK ORDER CHANGES					
DATE	STEP	PROCEDURE CHANGE	By	Date	Qty	Approval Chief Eng / Prod Mgr	Approval QC Inspector

Part No: _____ **PAR #:** _____ **Fault Category:** _____ **NCR:** Yes No **DQA:** _____ **Date:** _____

Resolution: _____ **Disposition:** _____ **QA: N/C Closed:** _____ **Date:** _____

NCR:		WORK ORDER NON-CONFORMANCE (NCR)						
DATE	STEP	Description of NC Section A	Corrective Action Section B			Verification Section C	Approval Chief Eng	Approval QC Inspector
			Initial Chief Eng	Action Description Chief Eng	Sign & Date			

NOTE: Date & initial all entries

DART AEROSPACE LTD	Work Order:	68516
Description: Panel, RH Oxygen Oxy Mincler.	Part Number:	04380-13
Inspection Dwg: 04380 Rev: P49		Page 1 of 1

FIRST ARTICLE INSPECTION CHECKLIST

THERMOFORMING SECTION

Description	Accept	Reject	Method of Inspection	Comments
Inside Radii less than 1/4 "	✓			
Shape Definition	✓			Minor flange deviation: not 100% flat but acceptable for fit.
Texture Retention	✓			
Material imperfections such as bumps, cracks, voids, scratching	✓			

Measured by:	[illegible]	Date:	11/04/15

TRIMMING SECTION

Drawing Dimension	Tolerance	Actual Dimension	Accept	Reject	Method of Inspection	Comments
15.4"	+/- 0.100	15.375"	✓		Tape DL-01	
13.75"	+/- 0.100	13.625"	✓		Tape DL-01	see attached.
11.75"	+/- 0.100	11.625"	✓		Tape DL-01	
3.0"	+/- 0.100	2.9"	✓		Tape DL-01	
1.5"	~~+/- 0.100~~	1.375"	✓		Tape DL-01	
4.5"	+/- 0.100	4.5"	✓		Tape DL-01	
3.1"	+/- 0.100	3.0"	✓		Tape DL-01	

Measured by:	[illegible]	Date:	11/04/15
Audited by:	for PAA	Date:	11-04-15
Preliminary Approval:		Date:	

Rev	Date	Change	Revised by	Approved
B	10.04.14	Added preliminary approval	KJ	

10-04-15

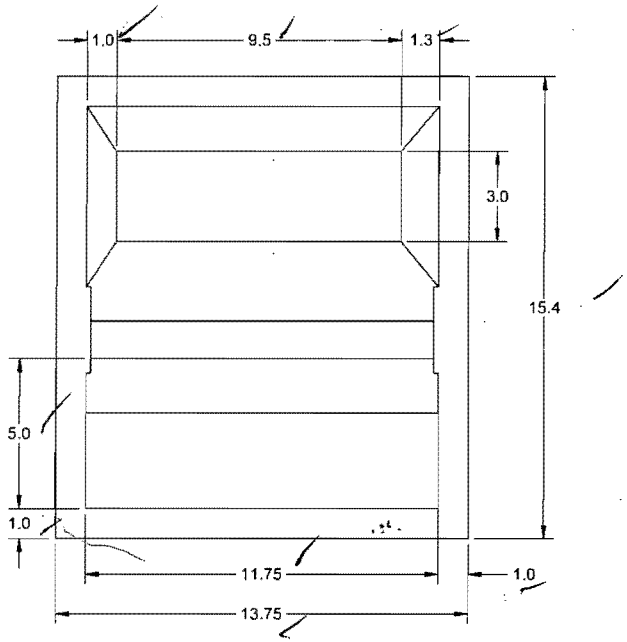

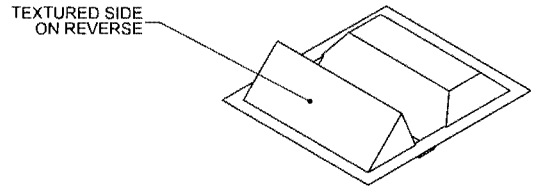

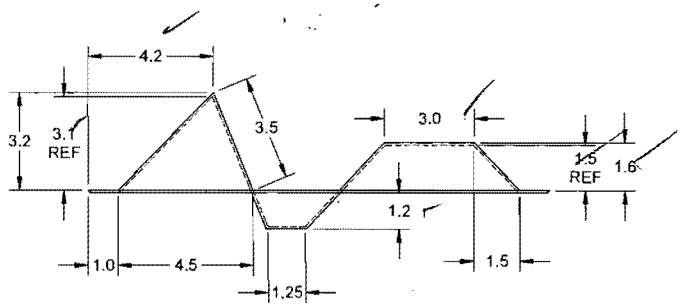

D4380-13 PANEL, RH OXYGEN AND OXY MINDER

NOTES:
1) MATERIAL: KYDEX 6185, 0.080 THICK, P3-VELOUR MATTE, IVORY #62015
REF DART SPEC MKYD6185S.080-P3-62015 0.125
2) FINISH: NONE
3) TOLERANCES: PER DART QSI 018 UNLESS OTHERWISE NOTED
4) UNITS: INCHES UNLESS OTHERWISE NOTED
5) BREAK SHARP EDGES: 0.005 TO 0.010 MAX
6) IDENTIFICATION: IDENTIFY PER QSI 044 6.1
7) WEIGHT: 1.21 lbs
8) MINIMUM ALLOWABLE THICKNESS AFTER THERMOFORMING = 0.040
9) TOOLING: THERMOFORM -13 PART PER MOULD DT9741.
TRIM PER MOULD LEAVING FINISHED EDGE.

PRELIMINARY ISSUE
BC 11.04.05

DESIGN	BC	**DART AEROSPACE LTD** HAWKESBURY, ONTARIO, CANADA
DRAWN	BC	
CHECKED		DRAWING NO. D4380 — REV. PA9 — SHEET 7 OF 19
MFG. APPR.		
APPROVED		TITLE: CEILING POCKETS — SCALE: NTS
DE APPR.		
DATE	11.04.05	

COPYRIGHT © 2011 BY DART AEROSPACE LTD
THIS DOCUMENT IS PRIVATE AND CONFIDENTIAL AND IS SUPPLIED ON THE EXPRESS CONDITION THAT IT IS NOT TO BE USED FOR ANY PURPOSE OR COPIED OR COMMUNICATED TO ANY OTHER PERSON WITHOUT WRITTEN PERMISSION FROM DART AEROSPACE LTD

Daryl Leger

From: Daniel Campbell <dcampbell@dartaero.com>
Sent: Monday, April 04, 2011 9:16 AM
To: 'Daryl Leger'
Cc: 'JEANLUC MENARD'; Bill Beckett; 'Linda Lacelle'; 'Harvey Siemens'; 'Mike Petsche'
Subject: D4323 & D4380 - Parts can be untrimmed

To Whom It May Concern,

The parts with p/n's D4323-XX and D4380-XX can be shipped to Calgary untrimmed, or even slightly out of spec in order to get parts here asap so they can be installed on the Westpac machine.

Thanks,

Daniel Campbell
Mechanical Engineer
DART Aerospace Ltd.

P: 403-717-0325
F: 403-717-1288
E: dcampbell@dartaero.com
W: www.dartaero.com
M: 1060 McTavish Road, NE, Calgary, Alberta, T2E 7G6

The information contained in this transmission is privileged and confidential and intended only for the use of the individual or entity to whom it is addressed. If you are not the intended recipient, you are hereby notified that any distribution, copying, disclosure or taking of any action in reliance on the contents of this transmission is strictly prohibited and review by any individual other than the intended recipient shall not constitute waiver of privilege. If you have received this transmission in error, please notify me immediately and delete the original transmission.

Daryl Leger

From: Daniel Campbell <dcampbell@dartaero.com>
Sent: Friday, April 15, 2011 10:31 AM
To: 'Daryl Leger'
Cc: 'Harvey Siemens'; 'Brad Jones'
Subject: D4323-13 Panel, RH Oxygen & Oxy Minder Dims

Hi Daryl,

As per our phone conversation, please ship the -13 panel even though the dims are slightly out of tolerances as per the dwg.

This is due to the fact that the part was made with a larger thickness (0.125" vs. 0.080").

Cheers,

Daniel Campbell
Mechanical Engineer
DART Aerospace Ltd.

P: 403-717-0325
F: 403-717-1288
E: dcampbell@dartaero.com
W: www.dartaero.com
M: 1060 McTavish Road, NE, Calgary, Alberta, T2E 7G6

The information contained in this transmission is privileged and confidential and intended only for the use of the individual or entity to whom it is addressed. If you are not the intended recipient, you are hereby notified that any distribution, copying, disclosure or taking of any action in reliance on the contents of this transmission is strictly prohibited and review by any individual other than the intended recipient shall not constitute waiver of privilege. If you have received this transmission in error, please notify me immediately and delete the original transmission.

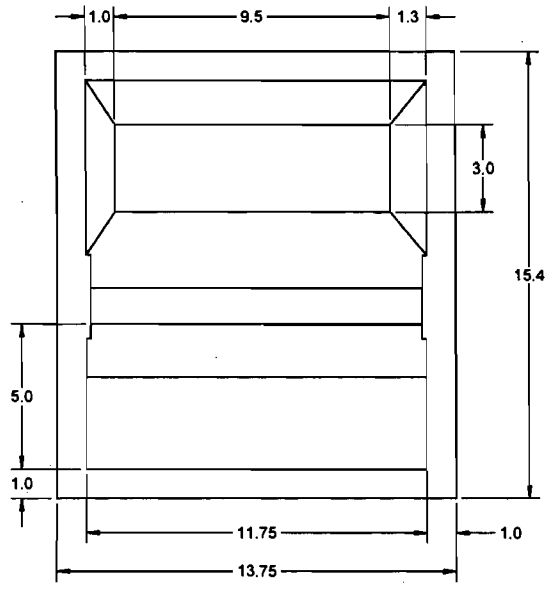

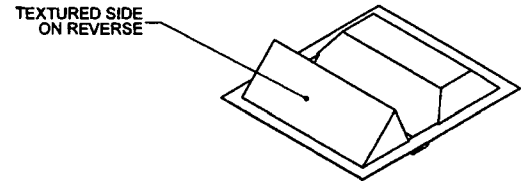

68516

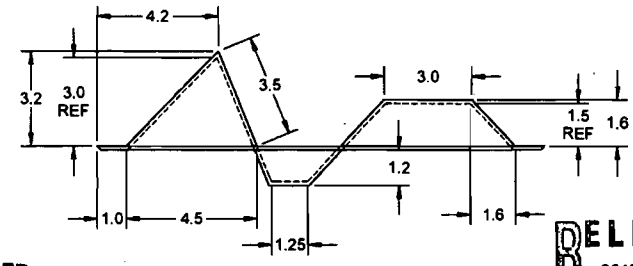

RELEASED
2011 -05- 10

D4380-13 PANEL, RH OXYGEN AND OXY MINDER

NOTES:
1) MATERIAL: KYDEX 6185, 0.125 THICK, P3-VELOUR MATTE, IVORY #62015
REF DART SPEC MKYD6185S.125-P3-62015
2) FINISH: NONE
3) TOLERANCES: PER DART QSI 018 UNLESS OTHERWISE NOTED
4) UNITS: INCHES UNLESS OTHERWISE NOTED
5) BREAK SHARP EDGES: 0.005 TO 0.010 MAX
6) IDENTIFICATION: IDENTIFY PER QSI 044 6.4
7) WEIGHT: 1.89 lbs
8) MINIMUM ALLOWABLE THICKNESS AFTER THERMOFORMING = 0.040
9) TOOLING: THERMOFORM PER MOULD DT9741 AND DART QSI 022
10) TRIM PER MOULD LEAVING FINISHED EDGE
11) MAXIMUM INSIDE RADIUS = 0.188

DESIGN	BC	**DART AEROSPACE LTD** HAWKESBURY, ONTARIO, CANADA
DRAWN	BC	
CHECKED		DRAWING NO. D4380 — REV. A — SHEET 7 OF 19
MFG. APPR.		
APPROVED		TITLE: CEILING POCKETS — SCALE: NTS
DE APPR.		
DATE	11.04.21	

COPYRIGHT © 2011 BY DART AEROSPACE LTD
THIS DOCUMENT IS PRIVATE AND CONFIDENTIAL AND IS SUPPLIED ON THE EXPRESS CONDITION THAT IT IS NOT TO BE USED FOR ANY PURPOSE OR COPIED OR COMMUNICATED TO ANY OTHER PERSON WITHOUT WRITTEN PERMISSION FROM DART AEROSPACE LTD.